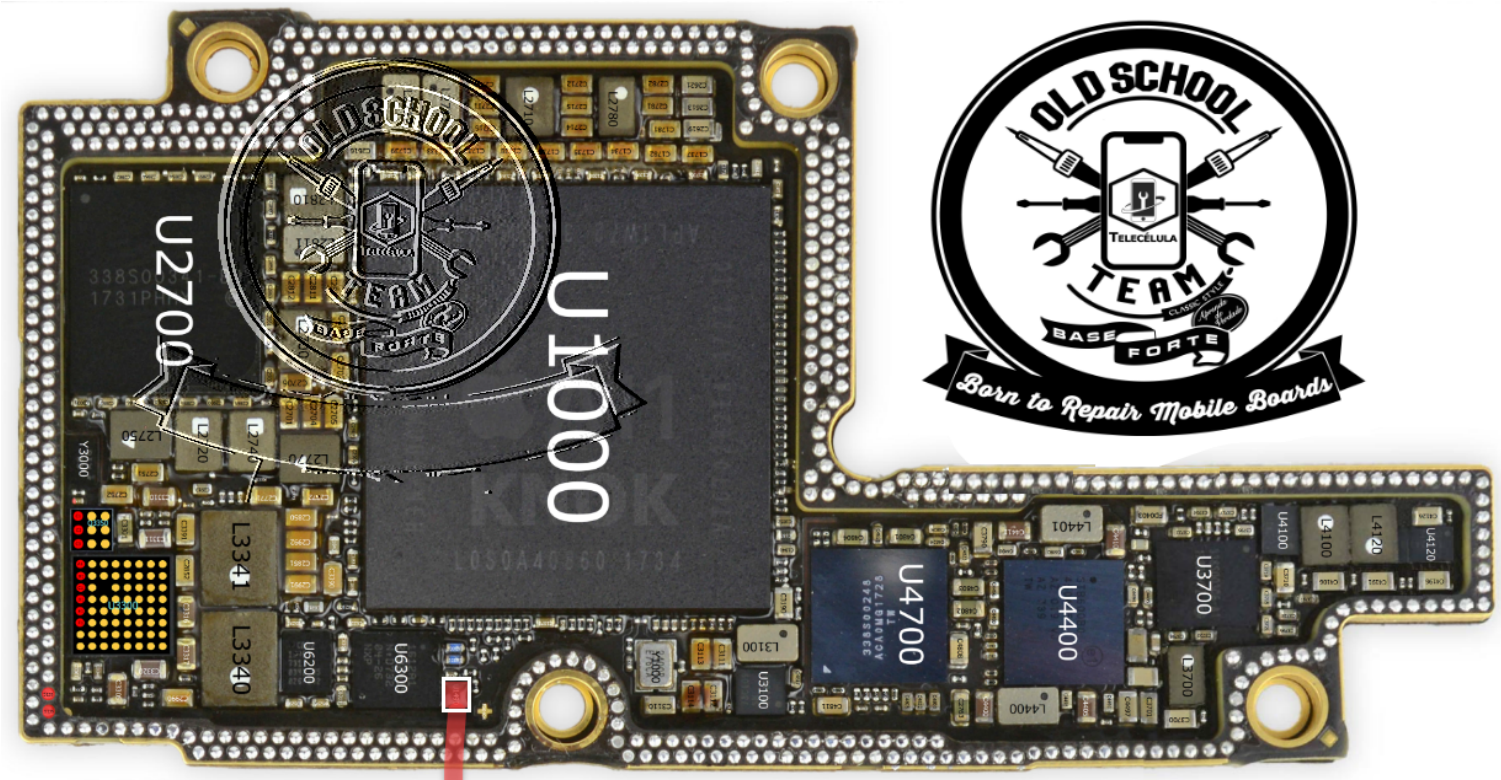

U1490
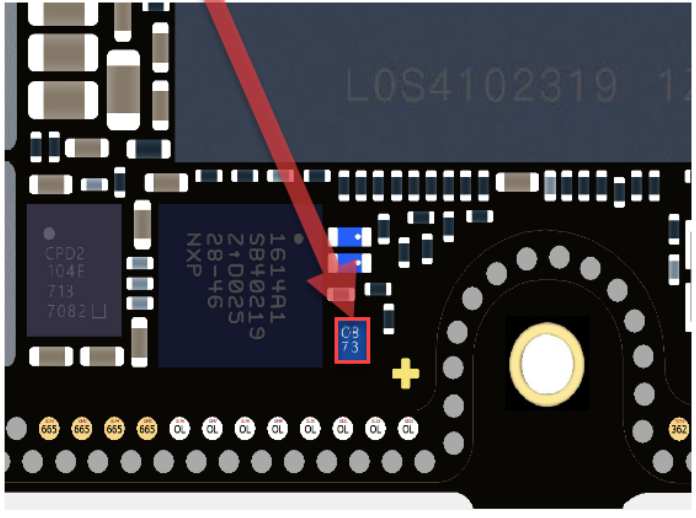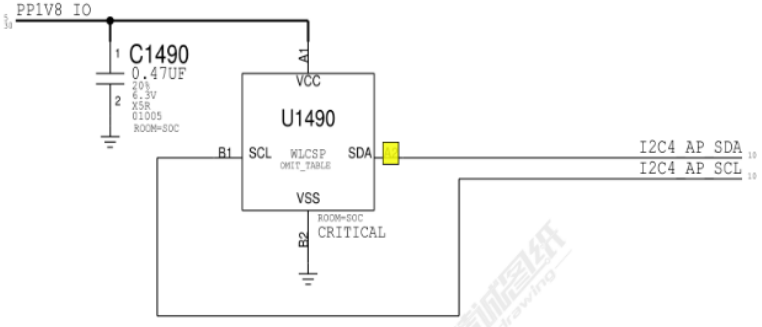
LOGIC EEPROM